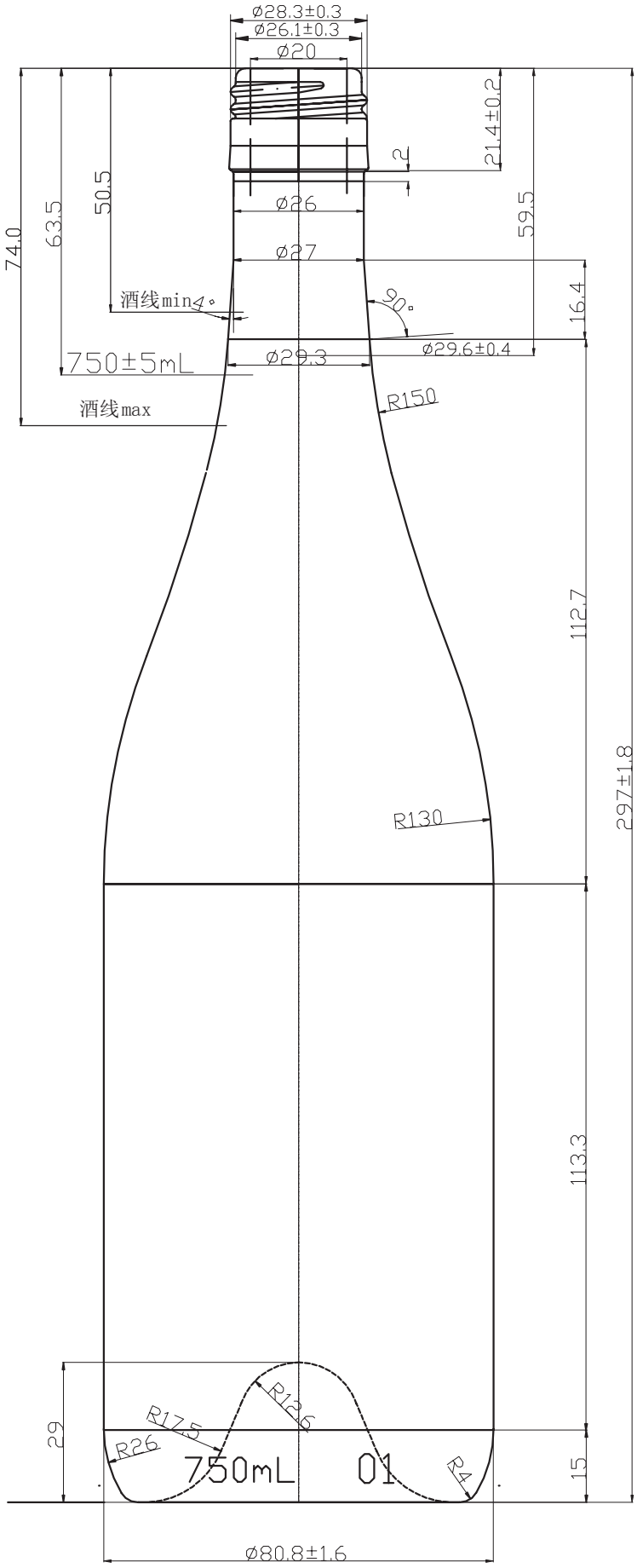

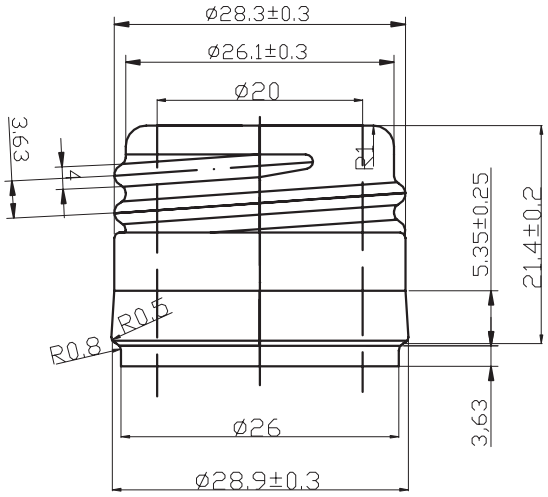

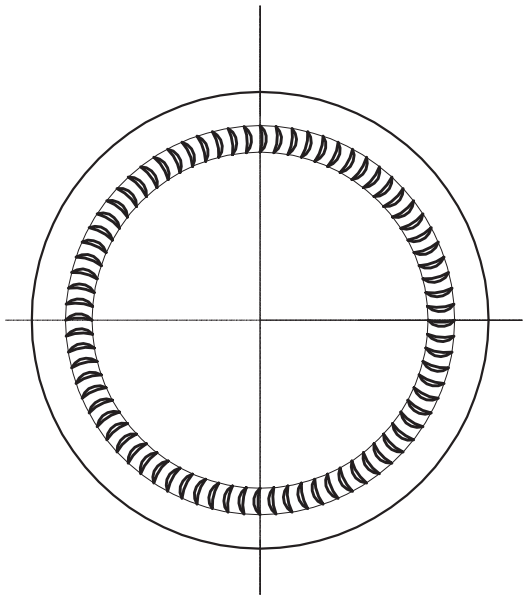

Item		Specification
Capacity		750 mL
Brim.Cap.		770±10 mL
Weight		495±25 g
Height		297±1.8 mm
Diameter		80.8±1.6 mm
Neck Finish	Thread Diameter	3.63 mm
	Finish Height	28.9±0.3 mm
	Outside Diameter	21.4±0.2 mm
	Inner Diameter	20 mm

Design		M1:1
Drawn		
Check		
Item No.	VGR 275-6	
Product	750mL Burgundy	

VINTNERS GLOBAL RESOURCE

© (2009) copying or use of this drawing without permission is prohibited